A Versatile Portable Exhaust Particle Sampling System to Extend Particle Number Measurements Below 23 Nanometers

M. Bainschab, A. Bergmann, S. Martikainen, P. Karjalainen, J. Keskinen, J. Andersson, A. Mamakos, T. Lähde, C. Haisch, O. Piacenza, A. Tomboulides, Z. Toumasatos, L. Ntziachristos, Z. Samaras

DownToTen

DownToTen is a Horizon 2020 funded project addressing engine exhaust particle measurement down to at least ten nanometers

- → Description of the nature of sub 23 nm particles
- → Development of a robust sampling and measurement methodology
- → Assessment of the fraction of particles left out of control (secondary aerosol)
- → <u>Set up a PN-PEMS demonstrator</u>

Requirements Sampling System

- Low sub-23 nm particle losses
- High versatility
- Insensitive to pressure fluctuations
- Portable

Sampling System

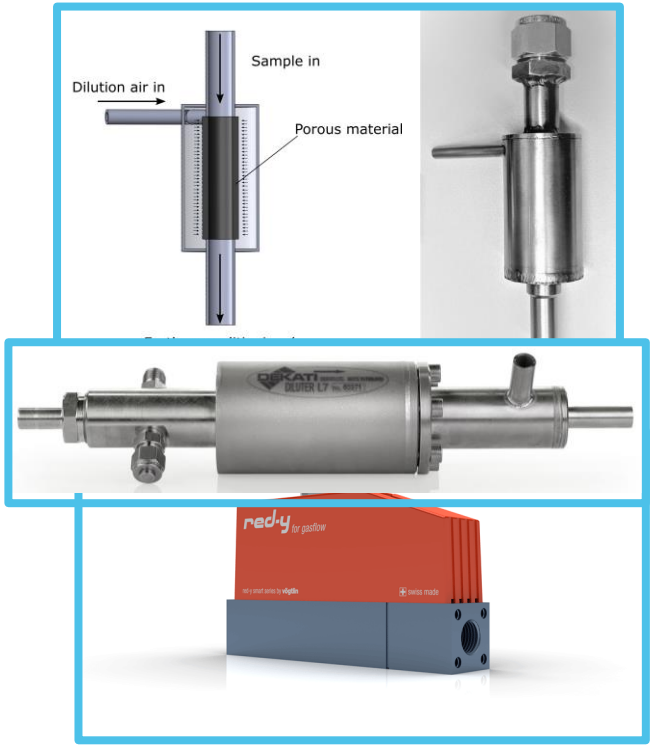

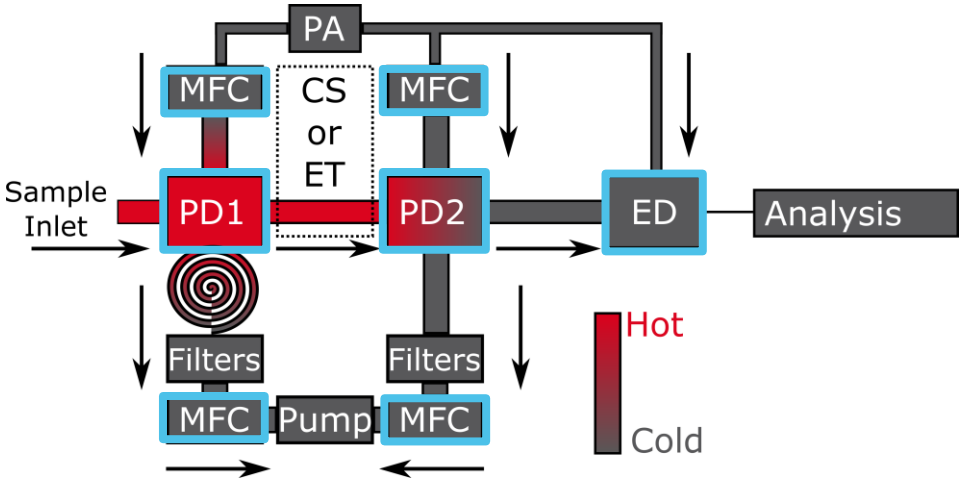

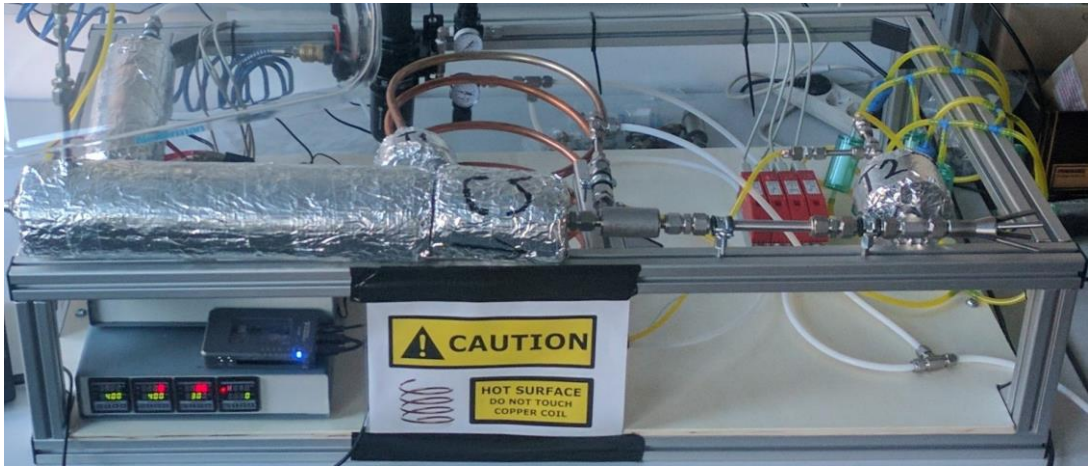
CAUTION
HOT SURFACE
DO NOT TOUCH
COPPER COIL

Particle Losses

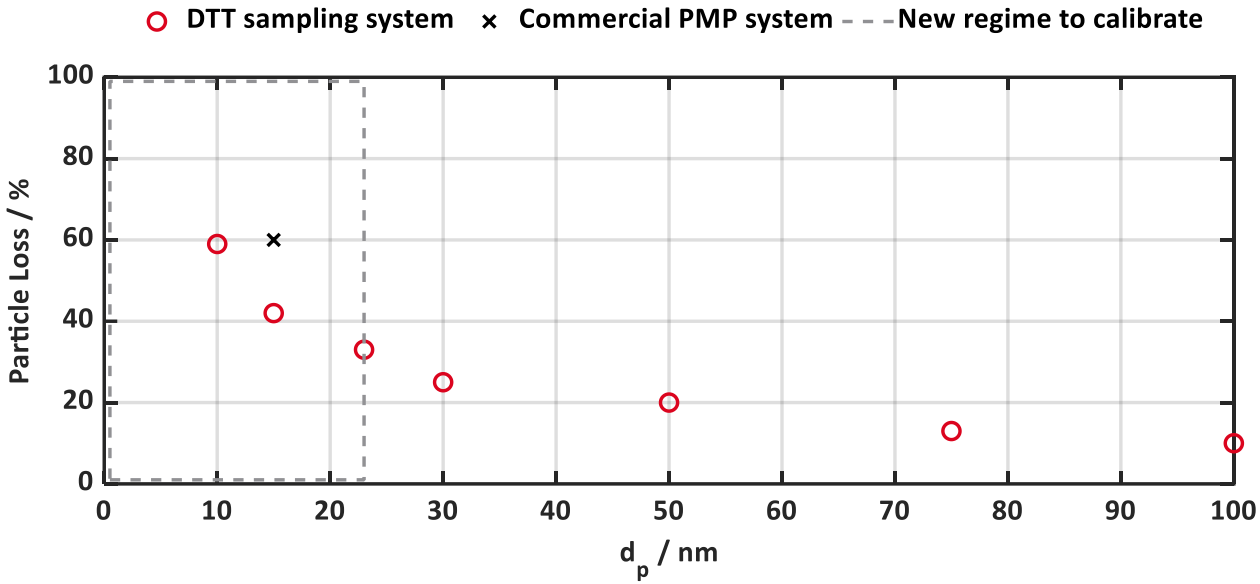

Versatility

- Solid particle number (SPN)
- SPN reduced losses
- Fresh aerosol
  (delayed primary particles)
- Aged aerosol
  (Secondary aerosol)

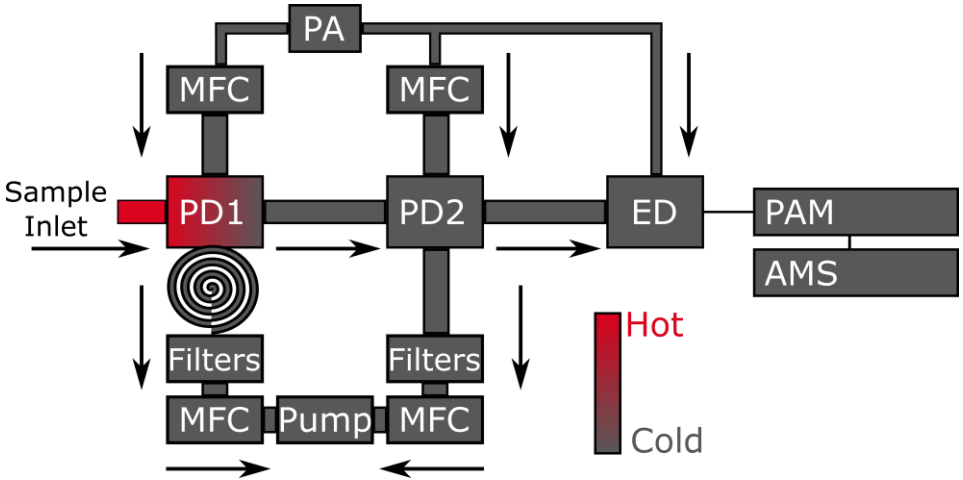

Pressure Sensitivity

- Create a model describing the response of the system to pressure pulses at the inlet(p_0)
- Experimental validation
- Proposal of two strategies to correct for the effect

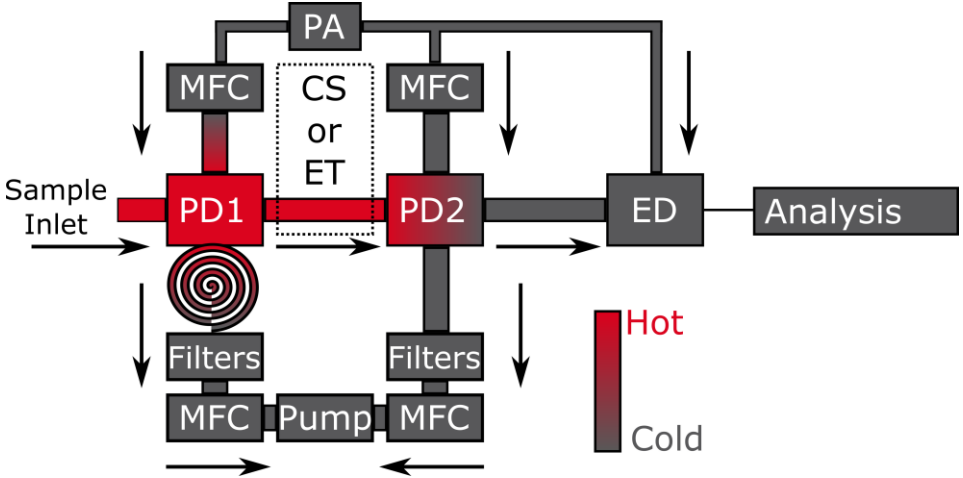

Model

Exponential response of ejector, MFC and CPC to pressure pulse

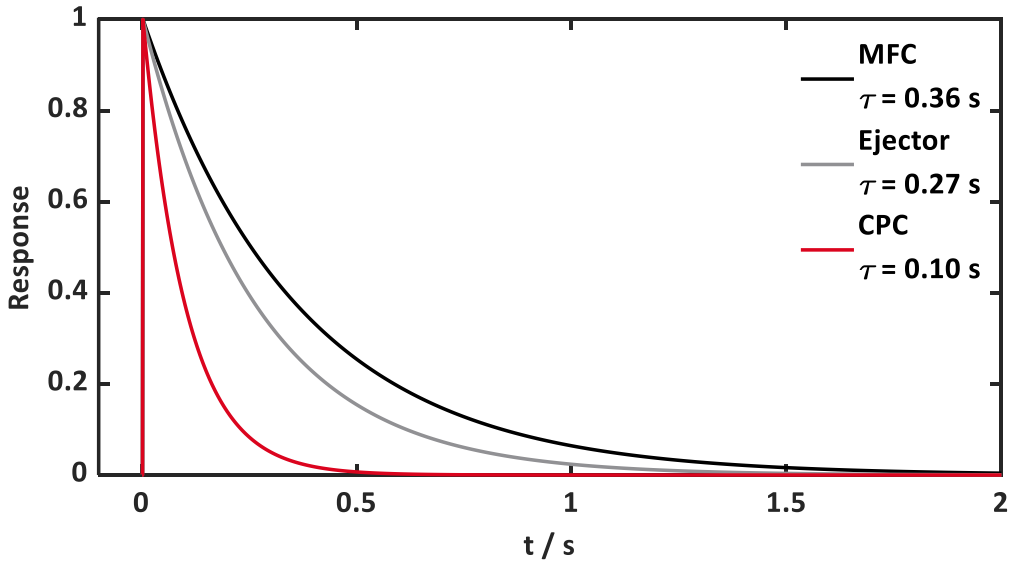

DR Response

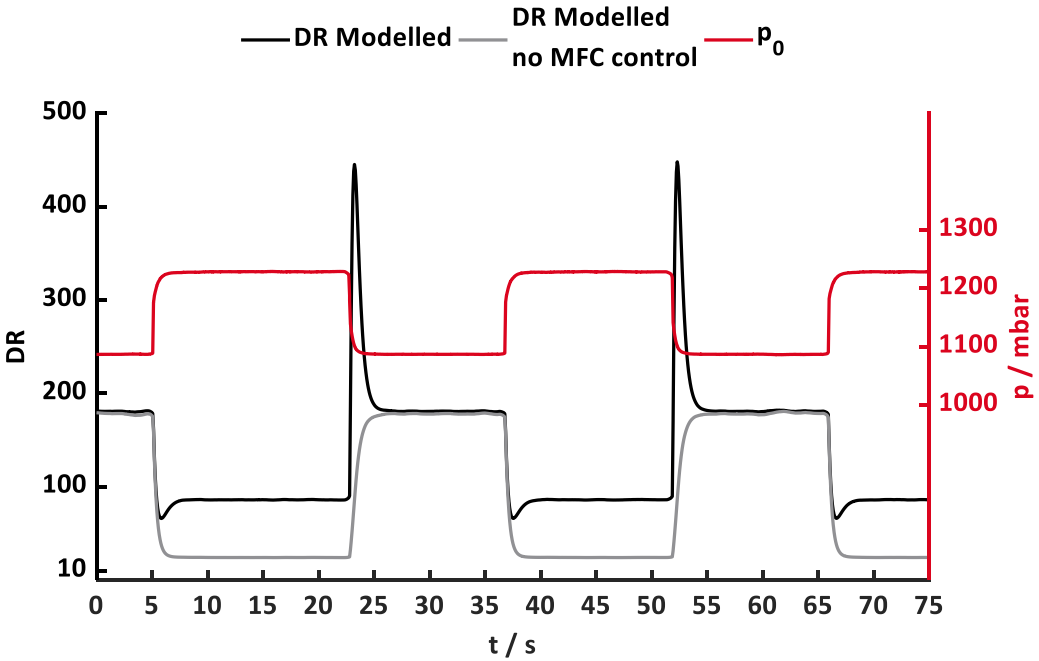
DR Modelled
DR Modelled no MFC control
p_0
500
400
300
200
100
10
DR
1300
1200
1100
1000
p / mbar
0
5
10
15
20
25
30
35
40
45
50
55
60
65
70
75
t / s

Concentration Response

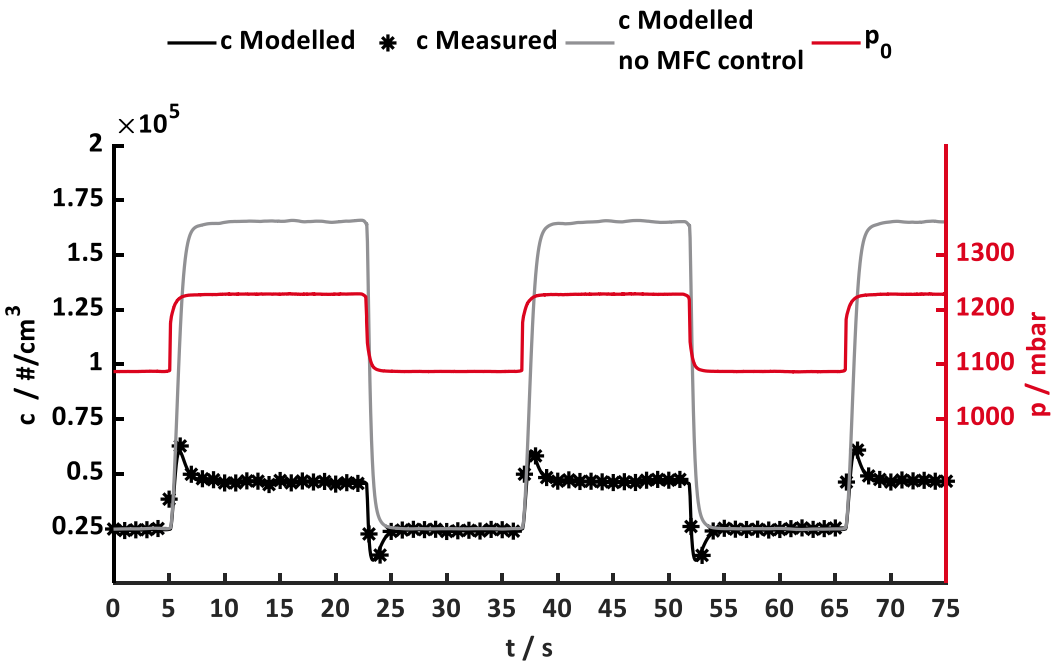

Correction Strategies

1. MFC control off
   - Magnitude of correction is high
   - Simple shape

2. MFC control on
   - Magnitude of correction is low
   - Complex shape

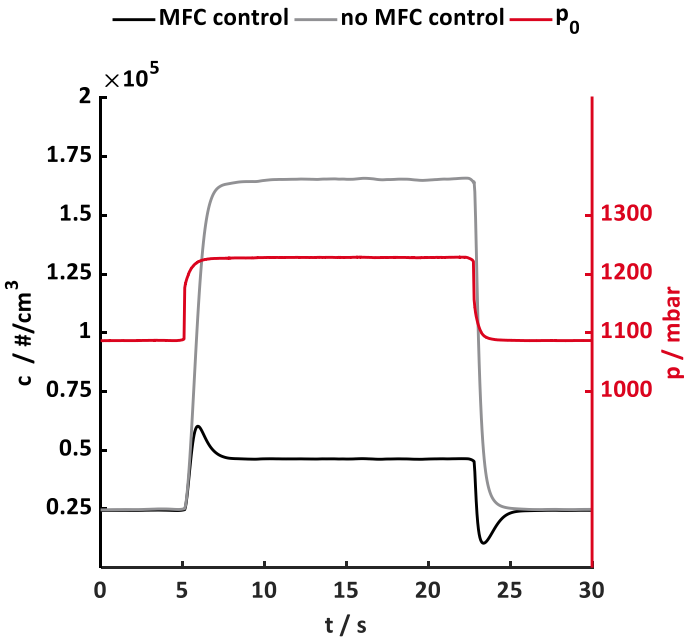

Portability

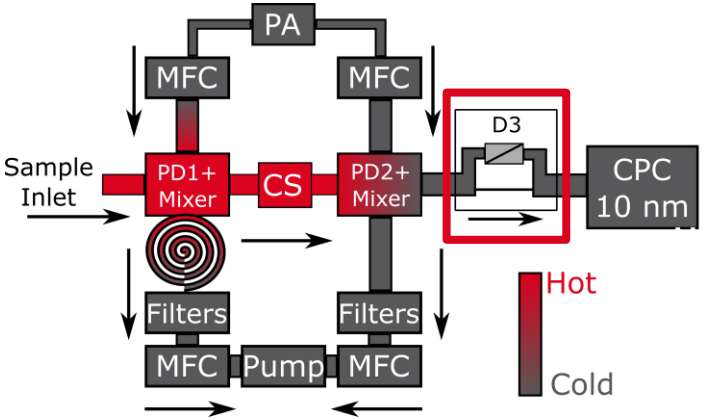

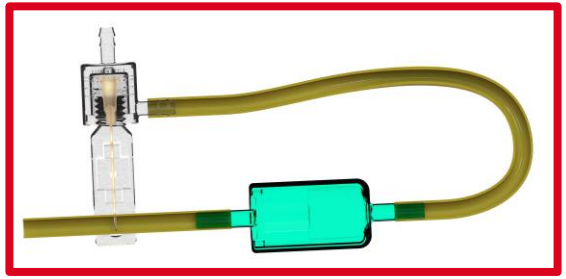

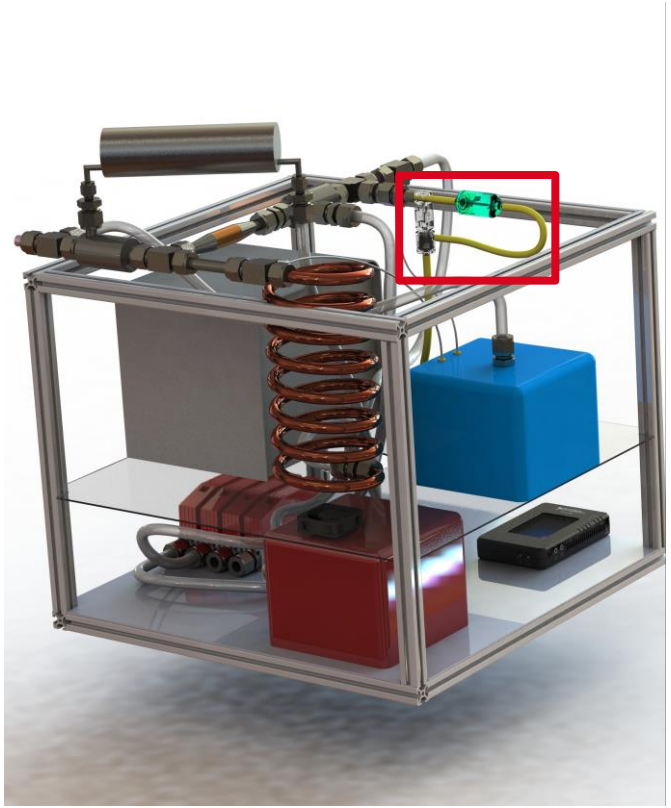

WE ARE EXPLORING THE **DOWN TO TEN** WORLD OF EMISSIONS AND WE WILL WORK TOGETHER TO BRING IT TO SUPER LOW LEVELS.